Pergamon

0094-114X(95)00100-X

Mech. Mach. Theory Vol. 31, No. 5, pp. 573–587, 1996
Copyright © 1996 Elsevier Science Ltd
Printed in Great Britain. All rights reserved
0094-114X/96 $15.00 + 0.00

A HOMOGENEOUS MATRIX APPROACH TO 3D KINEMATICS AND DYNAMICS — I. THEORY

GIOVANNI LEGNANI
Dip. di Ing. Meccanica, Universita' di Brescia, Via Branze 38, 25123 Brescia, Italy

FEDERICO CASOLO, PAOLO RIGHETTINI and BRUNO ZAPPA
Dip. Transporti e Movimentazione, Politecnico di Milano, Pz.a L. Da Vinci 32, 20133 Milano, Italy

(Received for publication 16 November 1995)

Abstract—In this paper we present a new approach to the kinematic and dynamic analysis of rigid body systems in the form of a consistent method employing 4×4 matrices. This method can be considered a powerful extension of the well known method of homogeneous transformations proposed by Denavit and Hartenberg. New matrices are introduced to describe the velocity and the acceleration, the momentum, the inertia of bodies and the actions (forces and torques) applied to them. Each matrix contains both the angular and the linear terms and so the "usual" kinematic and dynamic relations can be rewritten, halving the number of equations. The resulting notation and expressions are simple, and very suitable for computer applications. A useful tensor interpretation of this method is also explained, and some connections of this notation with the screw theory and dual-quantities are quoted. Copyright © 1996 Elsevier Science Ltd.

1. INTRODUCTION

The research in many fields like robotics and biomechanics has stimulated the development of 3D kinematics and dynamics and many papers on this subject have been published in the last decade; however they tend to be either specific to a certain application or they consider only a limited part of the problem.

The works that deal with this question in depth appear non-homogeneous in the mathematical approach to the various steps of the kinematic and dynamic problems, whether direct or inverse. As an example, many authors use the well known homogenous matrix notation [1] to define the position of bodies and points, but for velocity, acceleration and dynamic analysis they use different approaches such as vectors [2–5], tensors [6], screw-theory [7–10], dual numbers [11–14] or mixed notation; other authors (e.g. [5]), use 6×6 matrices.

The tensor approach results in compact forms but requires deep mathematical bases. Screw theory allows simple geometrical interpretation, but it is restricted to speed and infinitesimal displacement analysis. Dual numbers are often used only as mathematical supports for the screw theory.

Even though these different methods are sometimes translated into matrix notation, they remain non-homogeneous with the approach used in position analysis: for example, for both the velocities and accelerations of the bodies, the rotational and linear components are treated separately [4, 15–20].

Particular attention must be paid to the interesting work by Uicker [21–24]. He proposes the adoption of some 4×4 matrices obtained by deriving the homogeneous transformation matrices with respect to time. Unfortunately, the resulting matrices do not contain the information in a user-friendly way. For example the angular velocities are represented by the time derivative of direction cosines. This approach is good for automatic linkages analysis but is not a clear way to describe some familiar concepts like "velocities composition" or Coriolis' theorem.

Although each of the quoted methods can be very convenient in individual cases, we felt the necessity to develop a "unified" methodology which could be conveniently utilised in many different situations. According to this methodology the pose† of a rigid body can be represented

†*Pose*: a term meaning position *and* orientation.

by a 4×4 matrix [1] that we will indicate by **M**. This matrix contains a 3×3 submatrix **R** describing the orientation of the body and a 3×1 vector **T** representing the position. To develop a full kinematic analysis of systems of rigid bodies according to our notation two new 4×4 matrices must be defined: **W** which describes the linear and the angular velocity of the body, and **H** which contains both the linear and the angular acceleration. Other matrices can be utilised to describe finite and infinitesimal displacements or other entities like the Instantaneous Screw Axis (ISA).

Finally three new matrices (Γ, Φ, **J**) are used in dynamics; they contain respectively: the linear and the angular momentum of the body, the actions (forces and torques) applied to the body and the mass distribution (mass, center of mass position, inertia tensor) of the body.

As described in later paragraphs, this notation has some useful properties: the presented matrices can be combined quite easily to write the "normal" kinematic and the dynamic relations handling both linear and angular terms at the same time. Moreover (see Section 3.3) it is quite easy to describe the relative motion between three or more bodies using familiar concepts like *velocity composition* or *Coriolis' theorem.*

Finally the present approach is quite convenient for computer applications and two standard libraries are available to help writing numerical simulation programs [25, 26].

The matrices introduced above can be seen as Cartesian components of tensors in the current reference frame. From the tensor interpretation the kinematic and dynamic relations may be obtained far from any reference frame.

The methodology has been developed in different steps since 1984 when Legnani showed how to represent efficiently, by means of two matrices **W** and **H**, the velocity and the acceleration of a rigid body [27–29]; subsequent papers [30–32] extended this approach to the whole dynamic analysis of systems of rigid bodies using the Newton–Euler approach. *The aim of this paper is to reorder the whole method and to extend it to the Lagrangian dynamics.*

It is important to say that our general approach comprises and generalizes other kinematic methods proposed for the solution of individual problems by some authors (e.g. [33–36]) *so a few details for this methodology can be found in other notations* (e.g. *matrix J is used also in* [35, 37]) *but many parts are totally original* (e.g. *matrices Γ and Φ*) *and most important the whole methodology has never been presented as a "unified" and "generalized" approach for spatial kinematics and dynamics.*

In the following paragraphs we assume a basic knowledge of the concepts of homogeneous transformations; however some of their fundamental characteristics will be quickly recalled in Section 2 in order to better present our notation.

2. POSITION MATRICES AND ROTOTRANSLATION

2.1. Notation and nomenclature

Given a vector $\vec{\mathbf{v}}$ its projections onto a chosen reference frame (k) may be collected in a vector matrix $\mathbf{v}_{(k)}$ or in a 3×3 "skew-symmetric" matrix $\underline{\mathbf{v}}_{(k)}$ (indicated by means of an underscore), therefore both matrices represent the same vector in (k)†:

$$\mathbf{v}_{(k)} = \begin{vmatrix} v_x \\ v_y \\ v_z \end{vmatrix} \quad \underline{\mathbf{v}}_{(k)} = \begin{vmatrix} 0 & -v_z & v_y \\ v_z & 0 & -v_x \\ -v_y & v_x & 0 \end{vmatrix}.$$

Using "underlined matrices" the vectorial expression $\vec{\mathbf{a}} = \vec{\mathbf{b}} \times \vec{\mathbf{c}}$ can be expressed in frame k as follows:

$$\mathbf{a}_{(k)} = \underline{\mathbf{b}}_{(k)} \mathbf{c}_{(k)}$$

or:

$$\underline{\mathbf{a}}_{(k)} = \underline{\mathbf{b}}_{(k)} \underline{\mathbf{c}}_{(k)} - \underline{\mathbf{c}}_{(k)} \underline{\mathbf{b}}_{(k)} = -\mathbf{b}_{(k)} \mathbf{c}^{\mathrm{t}}_{(k)} + \mathbf{c}_{(k)} \mathbf{b}^{\mathrm{t}}_{(k)}.$$

If we consider two different frames (i) and (j), the representations $\mathbf{v}_{(i)}$ and $\mathbf{v}_{(j)}$ of the same vector $\vec{\mathbf{v}}$ in (i) and (j) are correlated by the well known rotation matrix $\mathbf{R}_{i,j}$.

†When a matrix is a Cartesian representation of a vector or of a tensor in a frame k, we add the subscript (k) to the matrix. The symbol (k) is also used as a shorthand of kth reference frame or body. A "global", an "absolute" or an inertial reference frame will often be indicated as (0). The subscript (k), in trivial cases, is sometimes omitted.

If vector $\vec{\mathbf{v}}$ is represented by a vector matrix $\mathbf{v}$ the change of reference formula is:

$$\mathbf{v}_{(i)} = \mathbf{R}_{i,j}\mathbf{v}_{(j)}.$$

While if vector $\vec{\mathbf{v}}$ is represented by the "underlined matrix" $\underline{\mathbf{v}}$ the previous relation becomes:

$$\underline{\mathbf{v}}_{(i)} = \mathbf{R}_{i,j}\underline{\mathbf{v}}_{(j)}\mathbf{R}^{t}_{i,j}.$$

For any vector $\vec{\mathbf{v}}$ and for any unit vector $\vec{\mathbf{u}}$ it yields:

$$\underline{v}v = 0 \quad \underline{u}^{n+2} = -\underline{u}^{n} \quad \text{for any } n = 1, 2, \ldots$$

2.2. Position matrices

Given any point P of a rigid body the relation between its homogeneous coordinate $P_0 = |x_0\, y_0\, z_0\, w|^t$ in an absolute reference frame (0) and its coordinate $P_1 = |x_l\, y_1\, z_1\, w|^t$ in a local, body-fixed reference frame (1), is described by the homogeneous transformation

$$P_0 = \mathbf{M}_{0,1} P_1. \tag{1}$$

The homogeneous coordinate w is null for points at infinity, and has generally the value of 1 for other points.

Therefore, the pose of the body with respect to the absolute reference frame can be represented by the 4×4 "Position matrix" $\mathbf{M}_{0,1}$:

$$\mathbf{M}_{0,1} = \left|\begin{array}{ccc|c} & \mathbf{R}_{0,1} & & \mathbf{t}_{0,1} \\ \hline 0 & 0 & 0 & 1 \end{array}\right| = \left|\begin{array}{ccc|c} x_x & y_x & z_x & t_x \\ x_y & y_y & z_y & t_y \\ x_z & y_z & z_z & t_z \\ \hline 0 & 0 & 0 & 1 \end{array}\right| = \left|\begin{array}{c|c|c|c} x_x & y_x & z_x & t_x \\ x_y & y_y & z_y & t_y \\ x_z & y_z & z_z & t_z \\ 0 & 0 & 0 & 1 \end{array}\right|,$$

where the 3×1 vector $\mathbf{t}_{0,1}$ is the position of the origin of (1) in (0), while the 3×3 submatrix $\mathbf{R}_{0,1}$ is the usual orthogonal rotation matrix describing the orientation (attitude) of frame (1) with respect to (0). Matrix $\mathbf{M}$ is often called the "Transformation matrix" or "Denavit and Hartenberg matrix".

It is possible to verify that the first three columns of matrix $\mathbf{M}_{0,1}$ contain the homogeneous coordinates in (0) of the three points at infinity of the axes of frame (1) while the last column contains the homogeneous coordinates in (0) of the origin of frame (1). It is well known that the inversion of a position matrix is always possible and very simple; considering equation (1), it is obvious that $\mathbf{M}_{0,1}^{-1}$ is the position matrix that describes the location of frame (0) with respect to (1), therefore:

$$\mathbf{M}_{0,1}^{-1} = \mathbf{M}_{1,0} = \left|\begin{array}{ccc|c} & \mathbf{R}_{1,0} & & \mathbf{t}_{1,0} \\ \hline 0 & 0 & 0 & 1 \end{array}\right|;$$

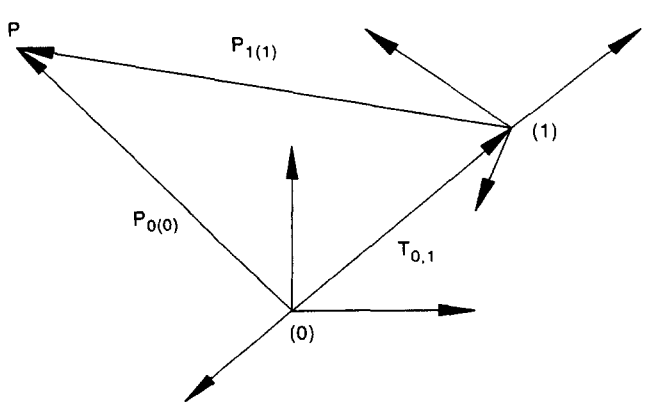

Fig. 1. Change of reference.

the relations between **R** and **t** of $\mathbf{M}_{0,1}$ and $\mathbf{M}_{1,0}$ are:

$$\mathbf{R}_{1,0} = \mathbf{R}_{0,1}^{t} = \mathbf{R}_{0,1}^{-1} \quad \mathbf{t}_{1,0} = -\mathbf{R}_{0,1}^{t}\mathbf{t}_{0,1}.$$

Given there frames (i), (j) and (k), position matrices **M** combine as:

$$\mathbf{M}_{i,k} = \mathbf{M}_{i,j}\mathbf{M}_{j,k}.$$

2.3. Rototranslation

The displacement of a frame which moves from an initial position (1) to a final position (2) can be described in a reference frame (0) by an appropriate rototranslation matrix **Q**.
If P_1 is the initial absolute position of a point embedded in the moving frames, its final position P_2 is:

$$P_2 = \mathbf{Q}P_1. \tag{2}$$

To obtain matrix **Q** we apply equation (2) (valid for any point) to the four columns of matrices $\mathbf{M}_{0,1}$ and $\mathbf{M}_{0,2}$ which describe the initial and final position of the moving frame, hence:

$$\mathbf{M}_{0,2} = \mathbf{Q}M_{0,1}. \tag{3}$$

Post-multiplying both sides of equation (3) by $\mathbf{M}_{0,1}^{-1}$ we obtain:

$$\mathbf{Q} = \mathbf{M}_{0,2}\mathbf{M}_{0,1}^{-1} = \mathbf{M}_{0,2}\mathbf{M}_{1,0}. \tag{4}$$

Matrix **Q** depends on the initial and final positions of the moving frame and on the choice of the reference frame (0). Assuming k as a new reference frame, in which we intend to describe the same screw-displacement, equation (4) becomes:

$$\mathbf{Q}_{(k)} = \mathbf{M}_{k,2}\mathbf{M}_{k,1}^{-1} = \mathbf{M}_{k,2}\mathbf{M}_{1,k}. \tag{5}$$

Remembering that:

$$\mathbf{M}_{k,2} = \mathbf{M}_{k,0}\mathbf{M}_{0,2}$$

and

$$\mathbf{M}_{k,1} = \mathbf{M}_{k,0}\mathbf{M}_{0,1},$$

and introducing these relations in equation (5) we can rewrite it as follows:

$$\mathbf{Q}_{(k)} = \mathbf{M}_{k,0}\mathbf{Q}_{(0)}\mathbf{M}_{k,0}^{-1}.$$

In other words the representations of the rototranslation in two different reference frames are related to each other by the relative position matrix of the two reference frames.

If matrix **Q** is expressed in frame (1) or (2), equation (5) becomes very simple and it yields:

$$\mathbf{Q}_{(1)} = \mathbf{Q}_{(2)} = \mathbf{M}_{1,2}.$$

This last relation emphasizes the link between position matrices **M** and matrices **Q**.

Since **Q** is the product of two position matrices it keeps the following blocks:

$$\mathbf{Q} = \left|\begin{array}{ccc|c} & \mathbf{R} & & \mathbf{t} \\ \hline 0 & 0 & 0 & 1 \end{array}\right|,$$

where **R** describes the rotation and **t** the translation of the body; any rototranslation is equivalent to a screw motion. Matrix **R** holds the unit vector of the screw axis and the rotation angle as can be shown (see Section 5):

$$\mathbf{R} = \mathbf{I} + \underline{\mathbf{u}}\sin(\phi) + \underline{\mathbf{u}}^2(1 - \cos(\phi)),$$

where **I** is a 3×3 identity matrix, **u** is a unit vector specifying the direction of the screw-axis and ϕ is the rotation angle. **t** holds the pitch p and a point $\mathbf{p}_{ax}$ of the screw axis:

$$\mathbf{t} = (\mathbf{I} - \mathbf{R})\mathbf{p}_{ax} + p\phi\,\mathbf{u}.$$

t is the displacement of the pole which is the point embedded on the moving frame that before the rototranslation lay in the origin of (k).

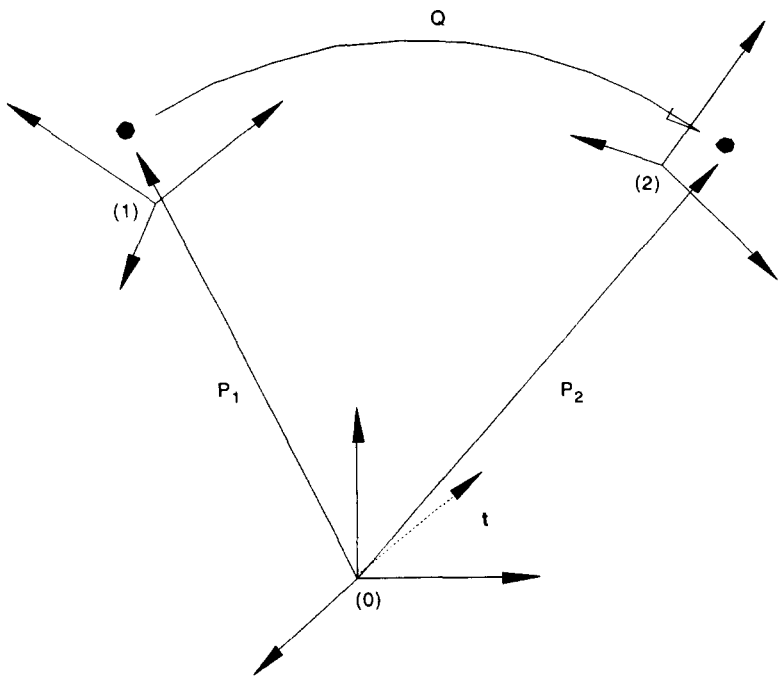

Fig. 2. Rototranslation.

3. VELOCITIES AND ACCELERATIONS MATRICES AND TENSORS

3.1. Basic definitions

To extend the transformation matrices approach to a full kinematics analysis, two new matrices **W** and **H** must be introduced. The angular and linear velocity of a body with respect to a reference frame can be represented by the velocity matrix† **W**:

$$\mathbf{W} = \left|\begin{array}{ccc|c} 0 & -\omega_z & \omega_y & v_x \\ \omega_z & 0 & -\omega_x & v_y \\ -\omega_y & \omega_x & 0 & v_z \\ \hline 0 & 0 & 0 & 0 \end{array}\right| = \left|\begin{array}{c|c} \underline{\omega} & \mathbf{v}_0 \\ \hline 0\ 0\ 0 & 0 \end{array}\right|,$$

where $\underline{\omega}$ indicates the angular velocity of the body and $\mathbf{v}_0$ is the velocity of the point, considered belonging to the body (called the pole) that in a considered instant is passing through the origin of the reference frame.
he velocity $\dot{P}$ of a point P on the body can be obtained as:

$$\dot{P} = \mathbf{W}P = \left|\begin{array}{c} \dot{x}_P \\ \dot{y}_P \\ \dot{z}_P \\ \hline 0 \end{array}\right| = \left|\begin{array}{c|c} \underline{\omega} & \mathbf{v}_0 \\ \hline 0\ 0\ 0 & 0 \end{array}\right| \left|\begin{array}{c} x_P \\ y_P \\ z_P \\ \hline 1 \end{array}\right|. \tag{6}$$

It is easy to verify that this equation is a matrix formulation of the usual vector formula:

$$\dot{\mathbf{v}}_p = \dot{\mathbf{v}}_0 + \dot{\boldsymbol{\omega}} \times (P - O).$$

†Matrix **W** contains, in a different form, the same informations of the dual velocities defined in [13, 38].

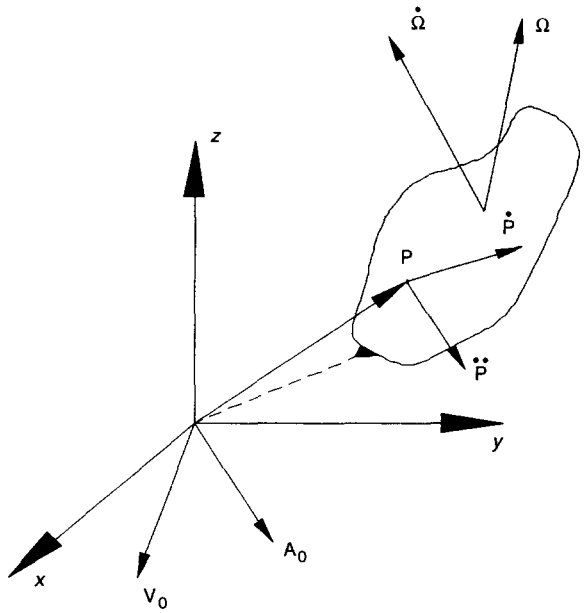

Fig. 3. Velocity and acceleration of a body.

Similarly, the relative acceleration of a body with respect to a reference frame may be indicated by the acceleration matrix **H**, as:

$$\mathbf{H} = \dot{\mathbf{W}} + \mathbf{W}^2 = \left|\begin{array}{ccc|c} & \mathbf{G} & & \mathbf{a}_0 \\ \hline 0 & 0 & 0 & 0 \end{array}\right|,$$

where the 3×3 submatrix **G** is given by: $\mathbf{G} = \dot{\underline{\omega}} + \underline{\omega}^2$ and $\mathbf{a}_0$ is the acceleration of the pole with respect to the reference frame. It obviously yields:

$$\dot{\underline{\omega}} = \tfrac{1}{2}(G - G^t) \quad \underline{\omega}^2 = \tfrac{1}{2}(G + G^t).$$

The acceleration $\ddot{P}$ of a point P of the body is:

$$\ddot{P} = \mathbf{HP} = \left|\begin{array}{c} \ddot{x}_P \\ \ddot{y}_P \\ \ddot{z}_P \\ \hline 0 \end{array}\right| = \left|\begin{array}{ccc|c} & \mathbf{G} & & \mathbf{a}_0 \\ \hline 0 & 0 & 0 & 0 \end{array}\right| \left|\begin{array}{c} x_P \\ y_P \\ z_P \\ \hline 1 \end{array}\right| \tag{7}$$

Again, it is easy to verify that this equation is a matrix formulation of the usual vector formula:

$$\vec{\mathbf{a}}_p = \vec{\mathbf{a}}_0 + \dot{\vec{\omega}} \times (P - O) + \vec{\omega} \times (\vec{\omega} \times (P - O)).$$

The first and second time-derivatives of the position matrix $\mathbf{M}_{0,1}$ can be obtained by remembering that each column represents the position of a point; for this reason, using equations (6) and (7), one can easily write the following relations:

$$\dot{\mathbf{M}}_{0,1} = \mathbf{W}\mathbf{M}_{0,1} \quad \mathbf{W} = \dot{\mathbf{M}}_{0,1}\mathbf{M}_{0,1}^{-1}$$

$$\ddot{\mathbf{M}}_{0,1} = \mathbf{H}\mathbf{M}_{0,1} \quad \mathbf{H} = \ddot{\mathbf{M}}_{0,1}\mathbf{M}_{0,1}^{-1}.$$

3.2. Change of reference

The value of the elements of matrix **W** depend on the frame used as reference for two reasons. First of all $\underline{\omega}$ and $\mathbf{v}_o$ must be represented by their components with respect to the chosen reference frame. Secondly the pole is the point of the body passing through the origin of the chosen reference frame.

For these reasons, if another frame is chosen matrix $\mathbf{W}$ changes because the pole must be the origin of the new reference and $\underline{\omega}$ and $\mathbf{v}_0$ must be projected onto the axis of the new reference. Matrix $\mathbf{H}$ behaves in the same way as $\mathbf{W}$.

If we have two different reference frames (r) and (s) we will indicate the representation of the velocity of a body in the two frames as $\mathbf{W}_{(r)}$ and $\mathbf{W}_{(s)}$ and the acceleration as $\mathbf{H}_{(r)}$ and $\mathbf{H}_{(s)}$.

Since the two matrices describe the velocity of the same body in two different frames their values are strictly dependent on each other. It is possible to prove (see Appendix A) that they are tensors which transform as:

$$\mathbf{W}_{(r)} = \mathbf{M}_{r,s}\mathbf{W}_{(s)}\mathbf{M}_{r,s}^{-1} \tag{8}$$

$$\mathbf{H}_{(r)} = \mathbf{M}_{r,s}\mathbf{H}_{(s)}\mathbf{M}_{r,s}^{-1}, \tag{9}$$

where $\mathbf{M}_{r,s}$ is the position matrix of the reference frame (s) with respect to (r).

In other words $\mathbf{W}_{(r)}$ and $\mathbf{W}_{(s)}$ are the Cartesian representation in (r) and in (s) of a tensor W. The same statement applies to $\mathbf{H}$. The validity of the previous formulas can be proved by expanding the matrices into their blocks and by executing the matrix product. For example the velocity matrix in (r) obtained by applying equation (8) is:

$$\mathbf{W}_{(r)} = \left|\begin{array}{ccc|c} & \underline{\omega}_{(r)} & & \mathbf{v}_{O_r} \\ \hline 0 & 0 & 0 & 0 \end{array}\right| = \left|\begin{array}{ccc|c} & \mathbf{R}_{r,s}\underline{\omega}_{(s)}\mathbf{R}_{r,s}^{t} & & \mathbf{R}_{r,s}\mathbf{v}_{O_s} - (\mathbf{R}_{r,s}\underline{\omega}_{(s)}\mathbf{R}_{r,s}^{t})\mathbf{t}_{r,s} \\ \hline 0 & 0 & 0 & 0 \end{array}\right|$$

where $\mathbf{R}_{r,s}\underline{\omega}_{(s)}\mathbf{R}_{r,s}^{t}$ is equal to $\underline{\omega}_{(r)}$, that is the angular velocity of the body in (r) and $\mathbf{R}_{r,s}\mathbf{V}_{O_s}$ is the velocity of pole O_s projected onto (r). Moreover it is easy to verify that the velocity $\mathbf{v}_{O_r}$ of the new pole is:

$$\mathbf{v}_{O_r} = R_{r,s}\mathbf{v}_{O_s} - \underline{\omega}_{(r)}\mathbf{t}_{r,s}.$$

This equation is just a matrix formulation of the following vector formula:

$$\vec{\mathbf{v}}_{O_r} = \vec{\mathbf{v}}_{O_s} + \vec{\boldsymbol{\omega}} \times (O_r - O_s),$$

where O_r and O_s are the origins of the frames (r) and (s), respectively.

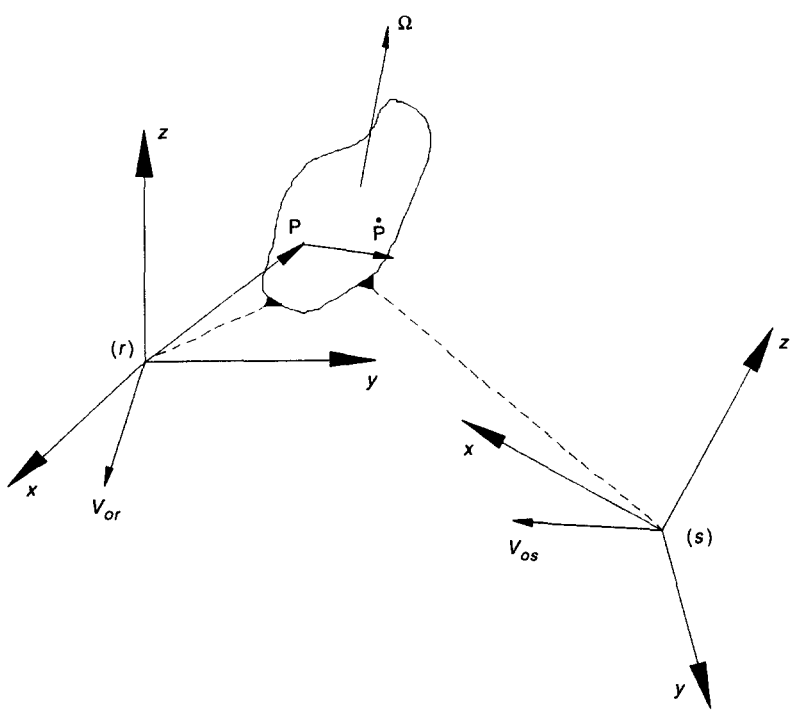

Fig. 4. Change of reference for velocities.

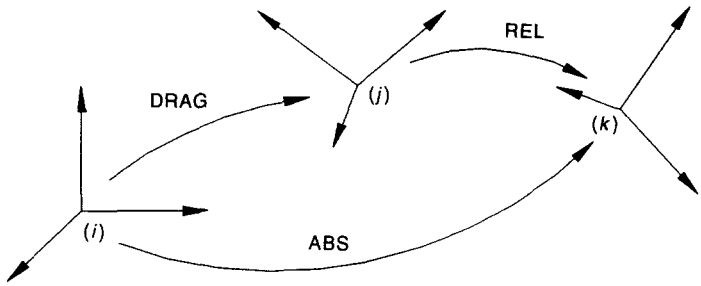

Fig. 5. Motion composition.

3.3. Relative kinematics

The relative motion between different bodies can easily be studied by using the presented matrices.

Let us consider as an example three bodies i, j and k (or three frames embedded in them). If the relative motion between bodies i and j ($\mathbf{W}_{i,j}\mathbf{H}_{i,j}$) and between j and k ($\mathbf{W}_{j,k}\mathbf{H}_{j,k}$) are known in any frame (r), using our homogeneous method the absolute velocity and acceleration ($\mathbf{W}_{i,k}\mathbf{H}_{i,k}$) of k can be simply written as:

$$\mathbf{W}_{i,k(r)} = \mathbf{W}_{i,j(r)} + \mathbf{W}_{j,k(r)} \tag{10}$$

$$\mathbf{H}_{i,k(r)} = \mathbf{H}_{i,j(r)} + \mathbf{H}_{j,k(r)} + 2\mathbf{W}_{i,j(r)}\mathbf{W}_{j,k(r)}. \tag{11}$$

It is easy to interpret the meaning of each addendum of the two formulas as drag, relative and (for the acceleration) Coriolis components.

The proof of equation (10) is presented in Appendix A for the case $r = i$. After having proved the validity of equations (10) and (11) in (i), it is easy to extend it in any reference frame by applying the change of base formulas (8), (9) on both sides of equations (10) and (11). Remembering that matrices **W** and **H** are Cartesian representations of tensors, equations (10) and (11) obviously hold in any reference frame and we can simply write:

$$\mathbf{W}_{i,k} = \mathbf{W}_{i,j} + \mathbf{W}_{j,k} \tag{12}$$

$$\mathbf{H}_{i,k} = \mathbf{H}_{i,j} + \mathbf{H}_{j,k} + 2\mathbf{W}_{i,j}\mathbf{W}_{j,k}. \tag{13}$$

4. DYNAMICS

The three new matrices introduced to develop the dynamic analysis of a system of rigid bodies are: the action matrix Φ, the momentum matrix Γ and the inertial matrix **J**.

4.1. Action matrix

The system of forces and couples (torques) applied to a body k is represented by the skew-symmetric action matrix Φ_k:

$$\Phi_k = \left|\begin{array}{c:c} \underline{\mathbf{c}} & \mathbf{f} \\ \hdashline -\mathbf{f}^t & 0 \end{array}\right| = \left|\begin{array}{ccc:c} 0 & -c_z & c_y & f_x \\ c_z & 0 & -c_x & f_y \\ -c_y & c_x & 0 & f_z \\ \hdashline -f_x & -f_y & -f_z & 0 \end{array}\right|, \tag{14}$$

where **f** is the resultant of the forces, while $\underline{\mathbf{c}}$ holds the torques calculated with respect to the origin of the reference frame. If $f = [f_x\ f_y\ f_z\ 0]^t$ is an infinitesimal force applied to an infinitesimal particle of the body whose position is **P** and whose volume is dv, matrix Φ is defined as an integral on the whole body:

$$\Phi = \int (f\mathbf{P}^t - \mathbf{P}f^t)\mathrm{d}v$$

where the term contained in the parentheses can be seen as an extension of the cross product for four-element vectors (see Section 2.1).

4.2. Momentum matrix

In a similar way, the angular and linear momentum of body k with respect to a reference frame may be described by the skew-symmetric momentum matrix Γ:

$$\Gamma_k = \left|\begin{array}{c:c} \gamma & \rho \\ \hdashline -\rho^{\mathrm{t}} & 0 \end{array}\right| = \left|\begin{array}{ccc:c} 0 & -\gamma_z & \gamma_y & \rho_x \\ \gamma_z & 0 & -\gamma_x & \rho_y \\ -\gamma_y & \gamma_x & 0 & \rho_z \\ \hdashline -\rho_x & -\rho_y & -\rho_z & 0 \end{array}\right|, \tag{15}$$

where γ is the angular momentum of the body evaluated with respect to the origin of the reference frame and $\rho = m|v_{x_g}\ v_{y_g}\ v_{z_g}|^{\mathrm{t}}$ represents the linear momentum of the rigid body. Matrix Γ contains the same information as the "dual Momentum" defined in [38].

If $\dot{P}$ is the velocity of an infinitesimal particle of the body whose position is P and whose mass is $\mathrm{d}m$, matrix Γ is defined as an integral on the whole body:

$$\Gamma = \int (\dot{P}\mathrm{P}^{\mathrm{t}} - \mathrm{P}\dot{P}^{\mathrm{t}})\mathrm{d}m$$

4.3. Inertial matrix

The mass distribution of the body k can be represented by the symmetric inertial matrix $\mathbf{J}$. This matrix is also called pseudo inertial matrix [35, 37].

$$\mathbf{J}_k = \left|\begin{array}{c:c} J & \mathbf{q} \\ \hdashline \mathbf{q}^{\mathrm{t}} & m \end{array}\right| = \left|\begin{array}{ccc:c} I_{xx} & I_{xy} & I_{xz} & q_x \\ I_{yx} & I_{yy} & I_{yz} & q_y \\ I_{zx} & I_{zy} & I_{zz} & q_z \\ \hdashline q_x & q_y & q_z & m \end{array}\right|, \tag{16}$$

where m is the mass and $\mathbf{q} = m|x_g\ y_g\ z_g|^{\mathrm{t}}$ is the product of the mass by the center of mass position of the body. The elements of submatrix $\mathbf{J}$ are defined as:

$$I_{xx} = \int x^2\,\mathrm{d}m \quad I_{yy} = \int y^2\,\mathrm{d}m \quad I_{zz} = \int z^2\,\mathrm{d}m$$

$$I_{xy} = \int xy\,\mathrm{d}m \quad I_{xz} = \int xz\,\mathrm{d}m \quad I_{xz} = \int yz\,\mathrm{d}m.$$

Note that the definitions of the elements of $\mathbf{J}$ are different from the usual inertia moments. For example the familiar inertia moment J_{xx} about axis x is given by:

$$J_{xx} = \int (y^2 + z^2)\,\mathrm{d}m = I_{yy} + I_{zz}$$

and so

$$I_{xx} = \frac{-J_{xx} + J_{yy} + J_{zz}}{2}.$$

In other words, matrix $\mathbf{J}$ is defined as the following integral on the whole body:

$$J = \int \mathbf{P}\mathbf{P}^{\mathrm{t}}\,\mathrm{d}m$$

4.4. Change of reference

It is also possible to show that dynamic matrices Φ, Γ and $\mathbf{J}$ are Cartesian representation of tensors and given two frames (r) and (s) they transform as:

$$\begin{aligned} \Phi_{k(r)} &= \mathbf{M}_{r,s}\Phi_{k(s)}\mathbf{M}_{r,s}^{\mathrm{t}} \\ \Gamma_{k(r)} &= \mathbf{M}_{r,s}\Gamma_{k(s)}\mathbf{M}_{r,s}^{\mathrm{t}} \\ \mathbf{J}_{k(r)} &= \mathbf{M}_{r,s}\mathbf{J}_{k(s)}\mathbf{M}_{r,s}^{\mathrm{t}}, \end{aligned} \tag{17}$$

where $\mathbf{M}_{r,s}$ is the position matrix of frame (s) with respect to (r).

The validity of these equations can be proved in the same way used for $\mathbf{W}$ and $\mathbf{H}$.

4.5. Relations between kinematic and dynamic matrices

The presented matrices can be easily combined to write the usual mechanics relations. Choosing an inertial frame (0) the Newton Law is:

$$\Phi_{k(0)} = \mathbf{H}_{0,k}\mathbf{J}_{k(0)} - \mathbf{J}_{k(0)}\mathbf{H}^{t}_{0,k}. \tag{18}$$

Expanding the matrices of equation (18) into their element and executing the matrix product one can prove that this relation is equivalent to the usual vector equations:

$$\vec{\mathbf{f}} = m\vec{\mathbf{a}}_G \quad \text{and} \quad \vec{\mathbf{c}} = I\dot{\vec{\omega}} + \vec{\omega} \times \vec{\gamma} + (G - O) \times \vec{\mathbf{f}}, \tag{19}$$

where I is the usual inertia tensor and G is the center of mass position of the body with respect to (0); $\vec{\gamma}$ is the angular moment, $\vec{\mathbf{f}}$ and $\vec{\mathbf{c}}$ are the force and the torque producing the acceleration $\vec{\mathbf{a}}_G$ and $\dot{\vec{\omega}}$.

The weight action may be evaluated by means of equation (18) introducing the gravity acceleration matrix $\mathbf{H}_g$:

$$\Phi_{k(0)} = \mathbf{H}_{g(0)}\mathbf{J}_{k(0)} - \mathbf{J}_{k(0)}\mathbf{H}^{t}_{g(0)} \quad \mathbf{H}_{g(0)} = \left|\begin{array}{ccc|c} 0 & 0 & 0 & g_x \\ 0 & 0 & 0 & g_y \\ 0 & 0 & 0 & g_z \\ \hline 0 & 0 & 0 & 0 \end{array}\right|,$$

where $\mathbf{H}_{g(0)}$ holds the gravity acceleration's components in (0). In the usual case where Z axis indicates the vertical direction pointing *up*, we have $g_x = 0$, $g_y = 0$, $g_z = -9.81$ m/s^2.

The linear and angular momentum of a body k whose velocity is $\mathbf{W}_k$ and whose inertia is $\mathbf{J}_k$ are given by the following formula:

$$\Gamma_k = \mathbf{W}_k\mathbf{J}_k - \mathbf{J}_k\mathbf{W}^{t}_k. \tag{20}$$

Again it is easy to verify that this equation is the matrix formulation of the two following vector formulas:

$$\vec{\rho} = m\vec{\mathbf{v}}_g \quad \text{and} \quad \vec{\gamma} = I\vec{\omega} + (G - 0) \times \vec{\rho}. \tag{21}$$

An original procedure to prove the validity of equations (18) and (20) is explained in Appendix A. To extend the validity of these equations in any reference frame it is sufficient to apply the transformation formulas (17) to both sides of (18) and (20).

The kinetic energy of the body k is expressed as a function of its velocity and inertial matrices by the relation†:

$$t_k = \tfrac{1}{2}Trace(\mathbf{W}_{0,k}\mathbf{J}_{k(0)}\mathbf{W}^{t}_{0,k}). \tag{22}$$

This equation can be easily proved from the definition of the kinetic energy of the body. If P is the position of a point of the body then $\dot{P}$ is its velocity, the kinetic energy of the body is the integral of the energy of the infinitesimal particles of mass dm‡:

$$t_k = \frac{1}{2}\int \dot{P}^{t}\dot{P}\,\mathrm{d}m = \frac{1}{2}Trace\left(\int \dot{P}\dot{P}^{t}\,\mathrm{d}m\right). \tag{23}$$

Introducing equation (6) into equation (23) one obtains:

$$t_k = \tfrac{1}{2}Trace\left(\int (\mathbf{WP})(\mathbf{WP})^{t}\,\mathrm{d}m\right) = \tfrac{1}{2}Trace\left(\int \mathbf{WPP}^{t}\mathbf{W}^{t}\,\mathrm{d}m\right)$$

The velocity matrix is independent from the mass, therefore, the last term of the equation can be rewritten as:

$$t_k = \tfrac{1}{2}Trace\left(\mathbf{W}\left(\int \mathbf{PP}^{t}\,\mathrm{d}m\right)\mathbf{W}^{t}\right). \tag{24}$$

It is easy to verify (see Appendix A) that the integral $\int \mathbf{PP}^{t}\,\mathrm{d}m$ is the inertial tensor $\mathbf{J}_k$ defined in Section 4.3.

†The *trace* of a square matrix is the sum of its diagonal elements.
‡If $\mathbf{X}$ is a column matrix it yields $Trace(\mathbf{XX}^{t}) = \mathbf{X}^{t}\mathbf{X}$.

The potential energy p_k of the body k due to the gravitational effects is expressed by:

$$p_k = -Trace(\mathbf{H}_{g(0)}\mathbf{J}_{k(0)}).$$

Knowing the kinetic and potential energy of a body, it is quite easy to develop the dynamic equations of a system of rigid bodies using the Lagrangian approach. More details are given in Part II of this paper in relation to serial manipulators.

4.6. The skew operator

To simplify the writing of some relations it is useful to define a new operator "skew" that for any square matrix $\mathbf{X}$ or tensor X is defined as follows:

$$skew[\mathbf{X}] = \mathbf{X} - \mathbf{X}^t.$$

Tensors Φ and Γ are skew-symmetric, therefore the equations (18) and (20) or vectorial equations (19) and (21) can be written as:

$$\Phi_{k(0)} = skew[\mathbf{H}_{0,k}\mathbf{J}_{k(0)}] \tag{25}$$

$$\Gamma_{k(0)} = skew[\mathbf{W}_{0,k}\mathbf{J}_{k(0)}]. \tag{26}$$

The notation (25) and (26) stresses that each of the two expansions is equivalent to a linear system of 6 equations: in fact, both Φ and Γ have only six independent elements. For example, in the trivial case of the body rotating around a principal inertial axis, if equation (25) is expressed in matrix form with respect to a frame having the origin in the center of the mass and the axes parallel to the principal inertial axes of the body, the system will assume the well known form:

$$\begin{cases} c_x = (I_{yy} + I_{zz})\dot{\omega}_x \\ c_y = (I_{xx} + I_{zz})\dot{\omega}_y \\ c_z = (I_{xx} + I_{yy})\dot{\omega}_z \end{cases} \quad \begin{cases} f_x = m\ddot{x} \\ f_y = m\ddot{y} \\ f_z = m\ddot{z} \end{cases}$$

5. MATRIX L

The matrix representing the instantaneous screw axis (ISA) of a body can be obtained from its velocity matrix $\mathbf{W}$ dividing it by the module of its angular velocity:

$$\mathbf{L} = \frac{\mathbf{W}}{|\omega|} = \left|\begin{array}{ccc|c} 0 & -u_z & u_y & b_x \\ u_z & 0 & -u_x & b_y \\ -u_y & u_x & 0 & b_z \\ \hline 0 & 0 & 0 & 0 \end{array}\right| = \left|\begin{array}{ccc|c} & \underline{\mathbf{u}} & & \mathbf{b} \\ \hline 0 & 0 & 0 & 0 \end{array}\right|,$$

where $|\omega| = \sqrt{\omega_x^2 + \omega_y^2 + \omega_z^2}$.
If $|\omega| = 0$, matrix $\mathbf{L}$ is defined as:

$$\mathbf{L} = \frac{\mathbf{W}}{|\mathbf{b}|}.$$

From the definition of $\mathbf{W}$ it is possible to see that $\underline{\mathbf{u}}$ represents the direction (unit vector) of the ISA, $\mathbf{b}$ can be expressed as:

$$\mathbf{b} = -\underline{\mathbf{u}}\mathbf{p}_{ax} + p\mathbf{u},$$

where p is the pitch and $\mathbf{p}_{ax}$ is a point of the axis. In other words $u_x, u_y, u_z, b_x, b_y, b_z$ are the Plucker coordinates of the screw axis. These coordinates are generally known as L, M, N, P, Q, R [39] or L, M, N, P^*, Q^*, R^* [8]. Matrix $\mathbf{L}$ of this paper has a meaning similar to matrix $\mathbf{Q}$ defined in [34, 40] and matrix Δ_i presented in [41].

From equation (6) if we consider an infinitesimal interval of time $\mathrm{d}t$, the displacement $\mathrm{d}\mathbf{P}$ of point $\mathbf{P}$ is:

$$\mathrm{d}P = \dot{P}\,\mathrm{d}t = \mathbf{W}P\,\mathrm{d}t,$$

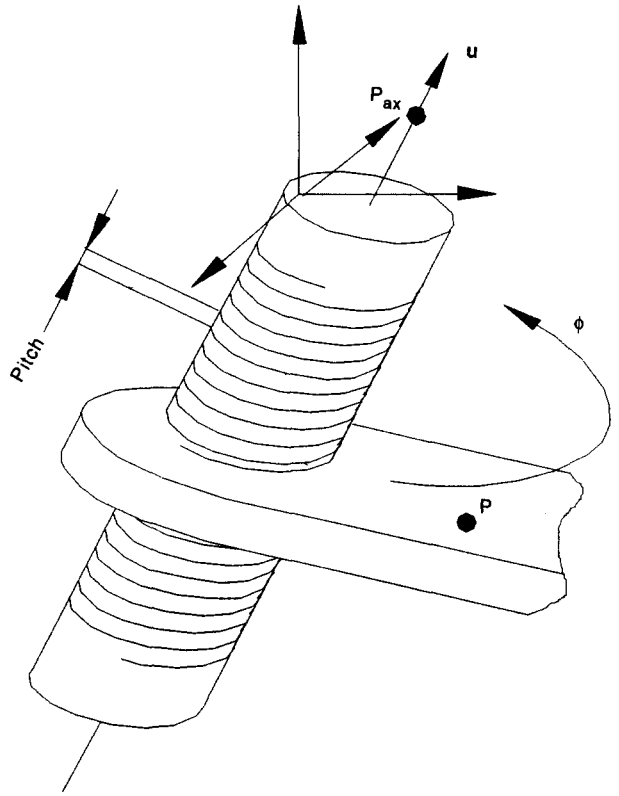

Fig. 6. Screw pair.

where the product $\mathbf{W}\,\mathrm{d}t$ represents the infinitesimal displacement of the body:

$$\mathbf{W}\,\mathrm{d}t = \left|\begin{array}{ccc|c} 0 & -\mathrm{d}\phi_z & \mathrm{d}\phi_y & \mathrm{d}x_o \\ \mathrm{d}\phi_z & 0 & -\mathrm{d}\phi_x & \mathrm{d}y_o \\ -\mathrm{d}\phi_y & \mathrm{d}\phi_x & 0 & \mathrm{d}z_o \\ \hline 0 & 0 & 0 & 0 \end{array}\right| = \left|\begin{array}{c|c} \underline{\mathrm{d}\boldsymbol{\phi}} & \mathrm{d}\mathbf{t}_o \\ \hline 0\ 0\ 0 & 0 \end{array}\right|,$$

where $\mathrm{d}\phi_x, \mathrm{d}\phi_y, \mathrm{d}\phi_z$ are the infinitesimal rotations of the body and $\mathrm{d}x_o, \mathrm{d}y_o, \mathrm{d}z_o$ is the linear displacement of the pole.

If the direction and the position of the ISA are constant, for example when the body is connected by a screw or revolute joint to the reference frame, matrix $\mathbf{L}$ is constant and we can write the following differential equation:

$$\mathrm{d}P = \dot{P}\,\mathrm{d}t = \mathbf{L}P\,\mathrm{d}\phi$$

or also:

$$\frac{\mathrm{d}P}{\mathrm{d}\phi} = \mathbf{L}P.$$

When integrated this becomes†:

$$P(\phi) = \exp[\mathbf{L}\phi]P(0) = \mathbf{Q}(\phi)P(0),$$

†exp[A] indicates the exponential of a square matrix $\mathbf{A}$ which is equal to:

$$\exp[\mathbf{A}] = \mathbf{I} + \mathbf{A} + \frac{\mathbf{A}^2}{2!} + \frac{\mathbf{A}^3}{3!} + \cdots \frac{\mathbf{A}^n}{n!}$$

where $P(0)$ is the initial position of the point, $P(\phi)$ is the position of the point after rototranslation of ϕ around the screw axis and $\mathbf{Q}(\phi)$ is the matrix describing the rototranslation:

$$\mathbf{Q}(\phi) = \exp[\mathbf{L}\phi] = \left|\begin{array}{c|c} \mathbf{R}(\phi) & \mathbf{t}(\phi) \\ \hline 0\ \ 0\ \ 0 & 1 \end{array}\right|,$$

where matrix $\mathbf{R}$ can be expressed as:

$$\mathbf{R} = \mathbf{I} + \underline{\mathbf{u}}\phi + \underline{\mathbf{u}}^2\frac{\phi^2}{2!} + \cdots + \underline{\mathbf{u}}^i\frac{\phi^i}{i!} + \cdots.$$

Since $\underline{\mathbf{u}}^{n+2} = -\underline{\mathbf{u}}^n$ (for any n) we can rewrite this equation as follows:

$$\mathbf{R} = \mathbf{I} + \underline{\mathbf{u}}\left(\phi - \frac{\phi^3}{3!} + \frac{\phi^5}{5!} - \cdots\right) + \underline{\mathbf{u}}^2\left(\frac{\phi^2}{2!} - \frac{\phi^4}{4!} + \cdots\right).$$

Noting that the terms between round brackets are the series expansions of sine and cosine we get:

$$\mathbf{R} = \mathbf{I} + \underline{\mathbf{u}}\sin(\phi) + \underline{\mathbf{u}}^2(1 - \cos(\phi)).$$

The translation $\mathbf{t}$ can be calculated as follows:

$$\mathbf{t} = (\mathbf{I} - \mathbf{R})\mathbf{p}_{ax} + \underline{\mathbf{u}}p\phi.$$

These results prove the contents of Section 2.3.

6. CONCLUSIONS

The adoption of the presented methodology gives rise to simple notation and easy programmable algorithms because:

(a) both linear and angular terms are handled simultaneously,

(b) usual concepts like velocity composition, Coriolis' theorem or the virtual work principles can be easily applied, and

(c) the practical applications of our theory required only the knowledge of classic mechanics and of the homogeneous transformation theory.

Moreover this methodology connects different methodologies for the kinematics and dynamics of rigid bodies such as homogeneous transformations, screw theory, and the tensor method.

Practical applications of the present methodology are reported in Part II.

Acknowledgements—The authors thank J. Trevelyan and R. Owens (University of Western Australia) and R. Garziera (University of Parma) for the precious suggestions during the compilation of the paper. The work has been partially supported by C.N.R. grant n. 93.00896 PF67 and a MURST grant.

REFERENCES

1. J. Denavit and R. S. Hartenberg, *Trans. ASME J. Appl. Mech.* **22,** 215–221 (June 1955).
2. S. H. Dwivedi, Ming-Shu Hsu and Dilip Kohli, *6th IFToMM World Cong.* (1983).
3. E. F. Fitchter, *Int. J. Robot. Res.* (1986).
4. K. P. Jankowski and H. A. ElMaraghy, *Int. J. Robot. Res.* 505–528 (1993).
5. K. Kozlowski, *Robotica* **11,** 27–36 (1993).
6. J. Casey and V. C. Lam, *Mech. Mach. Theory* **21,** 87–97 (1986).
7. J. E. Baker, *Mech. Mach. Theory* **4,** (1986).
8. E. H. Bokelberg, K. H. Hunt and P. R. Ridley, *Mech. Mach. Theory* **27,** 1–15 (1992).
9. K. H. Hunt, *Robotica* **4,** 171–179 (1986).
10. P. R. Ridley, E. H. Bokelberg and K. H. Hunt, *Mech. Mach. Theory* **27,** 17–35 (1992).
11. J. M. McCarthy, *Int. J. Robot. Res.* **5,** (1986).
12. D. P. Chevallier, *Mech. Mach. Theory* **26,** 613–627 (1991).
13. I. S. Fisher, *J. Mech. Design* **114,** 263–268 (1992).
14. G. R. Veldkamp, *Mech. Mach. Theory* **11,** 141–156 (1976).
15. J. Angeles, *Int. J. Robot. Res.* **4,** (Summer 1985).
16. B. M. Bahgat and S. A. El-Shakery, *Mech. Mach. Theory* **28,** 407–415 (1993).
17. P. Choiffet, *Les Robots, Tome 1: Modelisation et Commande.* Hermes, Neully (1981).
18. C. W. Spoor and F. E. Veldpaus, *J. Biomech.* **13,** 391–393 (1980).
19. J. Wittenburg, *Dynamic of System of Rigid Bodies.* B. G. Teubner, Stuttgardt, Vol. 33 (1977).
20. M. Vukobratović, *Applied Dynamics of Manipulation Robots.* Springer-Verlag, Berlin (1989).
21. J. Denavit, R. S. Hartenberg, R. Razi and J. J. Uicker, *J. Appl. Mech.* 903 (1965).

22. P. N. Sheth and J. J. Uicker, Jr., *J. Engng. Ind.*, p. 102 (1971).
23. J. J. Uicker, *J. Engng. Ind.*, p. 251 (1969).
24. J. J. Uicker and P. N. Sheth, *J. Engng. Ind.*, p. 454 (1972).
25. R. Faglia and G. Legnani, *Spacelib Distribution Disk and User Manual.* Mechanical Engineering Dept, University of Brescia (1989).
26. R. Garziera and P. Righettini, *Chain + +*. University of Parma (1993).
27. G. Legnani, Doctoral Dissertation, Politecnico di Milano, Italy (1986).
28. G. Legnani and R. Riva, *7th AIMETA National Congr.*, Trieste (1984).
29. G. Legnani and R. Riva, *7-th IFToMM World Congress*, Sevilla (1987).
30. F. Casolo and G. Legnani, *9th AIMETA National Congress*, Bari, Italy (1988).
31. F. Casolo and G. Legnani, *2nd Int. Symposium on Computer Simulation in Biomechanics*, 24–25 June, Davis, CA (1989).
32. G. Legnani and R. Riva, *SYROM'89: The 5th IFToMM Int. Symposium on Linkages and Computer Design Methods*, 6–11 July, Bucarest, Romania (1989).
33. C. P. Neuman and V. D. Tourassis, *Mech. Mach. Theory* **20**, (1985).
34. B. Paul and J. Rosa, *Int. J. Robot. Res.* **5**, (1986).
35. P. Paul Richard, *Robot Manipulators: Mathematics, Programming and Control.* MIT Press, Cambridge (1981).
36. L. Van Aken and H. Van Brussel, *Software for Solving the Inverse Kinematic Problem for Robot Manipulators in Real Time.* Advanced Software in Robotics, Elsevier, Amsterdam, pp. 159–174 (1984).
37. Chang-Jin Li and T. S. Sankar, *Mech. Mach. Theory* **28**, 233–248 (1993).
38. S. K. Agrawal, *J. Mech. Design* **115**, 833–838 (December 1993).
39. Parking, *Mech. Mach. Theory* **27**, 117–118 (1992).
40. Y. J. Lin and H. Y. Zhang, *Robotica* **11**, 139–147 (1993).
41. C. J. Li and T. S. Sankar, *Mech. Mach. Theory* **27**, 741–750 (1992).

APPENDIX A

A1. Demonstration of the velocity composition rule:

$$\mathbf{W}_{i,k(i)} = \mathbf{W}_{i,j(i)} + \mathbf{W}_{j,k(i)}.$$

If P_k is a point embedded in body k, knowing the position matrices $\mathbf{M}_{i,j}$ and $\mathbf{M}_{j,k}$ we can write:

$$P_i = \mathbf{M}_{i,k} P_k = \mathbf{M}_{i,j}\mathbf{M}_{j,k} P_k.$$

The absolute velocity $\dot{P}_i$ of the point P_i is (nothing that P_k is constant):

$$\dot{P}_i = [\dot{\mathbf{M}}_{i,j}\mathbf{M}_{j,k} + \mathbf{M}_{i,j}\dot{\mathbf{M}}_{j,k}]P_k.$$

Introducing into this equation the identity matrices $\mathbf{I}$ written as:

$$\mathbf{I} = \mathbf{M}_{i,j}^{-1}\mathbf{M}_{i,j} \quad \text{and} \quad \mathbf{I} = \mathbf{M}_{j,k}^{-1}(\mathbf{M}_{i,j}^{-1}\mathbf{M}_{i,j})\mathbf{M}_{j,k}$$

we obtain:

$$\dot{P}_i = [\dot{\mathbf{M}}_{i,j}(\mathbf{M}_{i,j}^{-1}\mathbf{M}_{i,j})\mathbf{M}_{j,k} + \mathbf{M}_{i,j}\dot{\mathbf{M}}_{j,k}(\mathbf{M}_{j,k}^{-1}(\mathbf{M}_{i,j}^{-1}\mathbf{M}_{i,j})\mathbf{M}_{j,k})]P_k$$

Remembering that $\mathbf{W} = \dot{\mathbf{M}}\mathbf{M}^{-1}$ we can rewrite the velocity $\dot{P}_i$ as follows:

$$\dot{P}_i = [\mathbf{W}_{i,j} + \mathbf{M}_{i,j}\mathbf{W}_{j,k(j)}\mathbf{M}_{i,j}^{-1}]\mathbf{M}_{i,j}\mathbf{M}_{j,k}P_k,$$

and finally remembering the change of reference formulas (see Section 3.2):

$$\dot{P}_i = [\mathbf{W}_{i,j(i)} + \mathbf{W}_{j,k(i)}]P_i.$$

Comparing this relation with the equation:

$$\dot{P}_i = \mathbf{W}_{i,k(i)}P_i$$

we get:

$$\mathbf{W}_{i,k(i)} = \mathbf{W}_{i,j(i)} + \mathbf{W}_{j,k(i)}.$$

In the same way the validity of the following equation:

$$\mathbf{H}_{i,k(i)} = \mathbf{H}_{i,j(i)} + \mathbf{H}_{j,k(i)} + 2\mathbf{W}_{i,j(i)}\mathbf{W}_{j,k(i)}$$

can be proved.

A2. Demonstration of the relation between action matrix, acceleration and inertia matrices (equation 18)

Let P be the position of a point of a body, $\ddot{P} = \mathbf{H}P$ its acceleration and $\mathrm{d}F = \ddot{P}\,\mathrm{d}m$ the inertial force acting on the infinitesimal particles of mass $\mathrm{d}m$, the action matrix Φ can be defined as follows:

$$\Phi = \int_m (\mathrm{d}\mathbf{F}P^t - P\,\mathrm{d}\mathbf{F}^t) = \int (\ddot{P}P^t - P\ddot{P}^t)\,\mathrm{d}m$$

$$= \int_m (\mathbf{H}PP^t - PP^t\mathbf{H}^t)\,\mathrm{d}m.$$

Since matrix **H** is independent of the mass, this relation becomes:

$$\Phi = \mathbf{H}\left(\int_m PP^{\mathrm{t}}\,\mathrm{d}m\right) - \left(\int_m PP^{\mathrm{t}}\,\mathrm{d}m\right)\mathbf{H}^{\mathrm{t}} = \mathbf{HJ} - \mathbf{JH}^{\mathrm{t}}.$$

Starting from the definition of matrix Γ:

$$\Gamma = \int_m (\dot{P}P^{\mathrm{t}} - P\dot{P}^{\mathrm{t}})\,\mathrm{d}m$$

and applying the same statement used for matrix Φ it is possible to prove the validity of equation (20).

A3. Demonstration of the change of reference formula for matrix **J** *(Section 4.4)*

Matrix **J** can be defined as:

$$\mathbf{J} = \int_m PP^{\mathrm{t}}\,\mathrm{d}m,$$

where P is the position of an infinitesimal particle of mass $\mathrm{d}m$ of the body.
Let us consider two different reference frames (r) and (s) whose relative position is described by matrix $\mathbf{M}_{r,s}$. The inertia matrices of the body in r and in s are:

$$\mathbf{J}_{(r)} = \int_m P_r P_r^{\mathrm{t}}\,\mathrm{d}m \quad \text{and} \quad \mathbf{J}_{(s)} = \int_m P_s P_s^{\mathrm{t}}\,\mathrm{d}m,$$

remembering that $P_r = \mathbf{M}_{r,s} P_s$ matrix $\mathbf{J}_{(r)}$ becomes:

$$\mathbf{J}_{(r)} = \int_m P_r P_r^{\mathrm{t}}\,\mathrm{d}m = \int_m \mathbf{M}_{r,s} P_s P_s^{\mathrm{t}} \mathbf{M}_{r,s}^{\mathrm{t}}\,\mathrm{d}m$$

$$= \mathbf{M}_{r,s}\left(\int_m P_s P_s^{\mathrm{t}}\,\mathrm{d}m\right)\mathbf{M}_{r,s}^{\mathrm{t}}.$$

Therefore:

$$\mathbf{J}_{(r)} = \mathbf{M}_{r,s}\mathbf{J}_{(s)}\mathbf{M}_{r,s}^{\mathrm{t}}$$

APPENDIX B

Subscript Conventions Summary

The relative motions between bodies are represented by matrices which usually appear with some subscripts:

$$\mathbf{M}_{i,j},\ \mathbf{W}_{i,j(k)},\ \mathbf{H}_{i,j(k)},\ \mathbf{L}_{i,j(k)}.$$

Subscripts i and j specify the bodies involved, the subscript k, which is in parentheses, denotes the frame onto which the quantities are projected. For instance the velocity of the body (5) with respect to body (3) projected on frame (2) is:

$$\mathbf{W}_{3,5(2)}.$$

In special cases when subscripts assume "standard" or "obvious values" some of them can be omitted to simplify the notation. This happens for example in Section 3 where the meaning of each matrix is presented. For the same reason in Part II, the third subscript k is often omitted when $k = i$.
The dynamic quantities **J**, Γ and Φ require just two subscripts:

$$\mathbf{J}_{i(k)},\ \Gamma_{i(k)},\ \Phi_{i(k)};$$

the subscript i denotes the body involved, and (k) has the previous meaning (frame on which the quantities are projected). Frame (0) is the absolute reference frame; in dynamics it is assumed to be also the inertial frame.